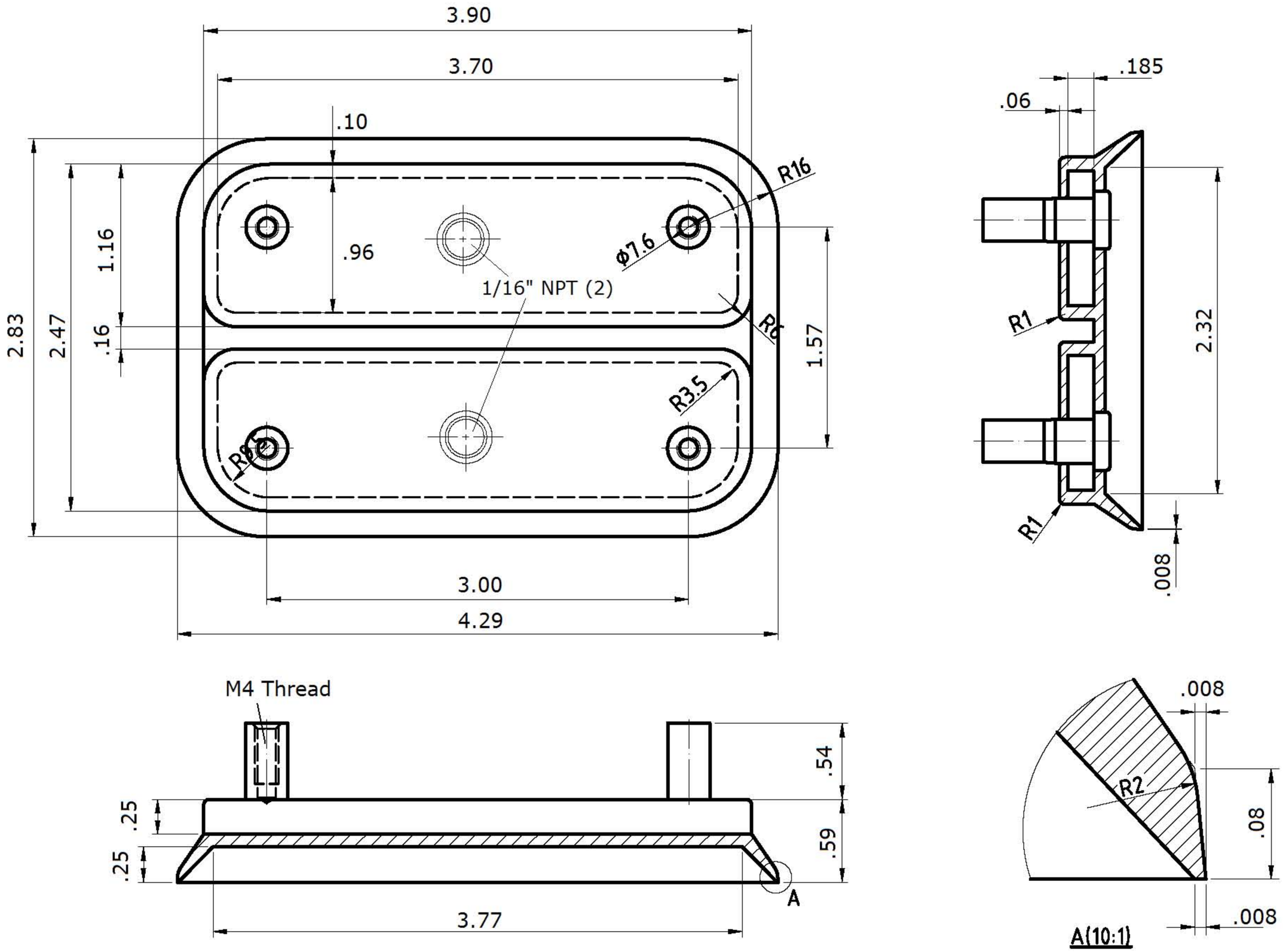

Unit: inches

Part Number: ORRVACUP-4x2-001

Apex Creative Automotive Products LLC
1918 Plaza Del Amo, #1
Torrance, CA 90501

TEL: (310) 347-1899 **Web: www.apexautopro.com**
FAX: (310) 782-6751 **Email: sales@apexautopro.com**